FRONT VIEW

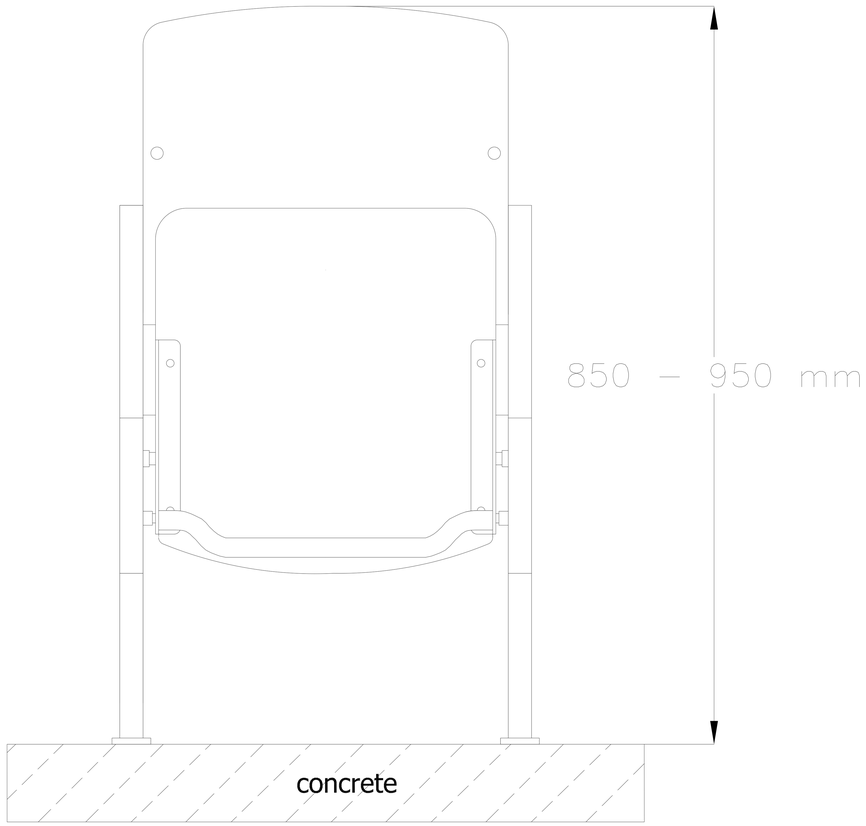

SIDE VIEW

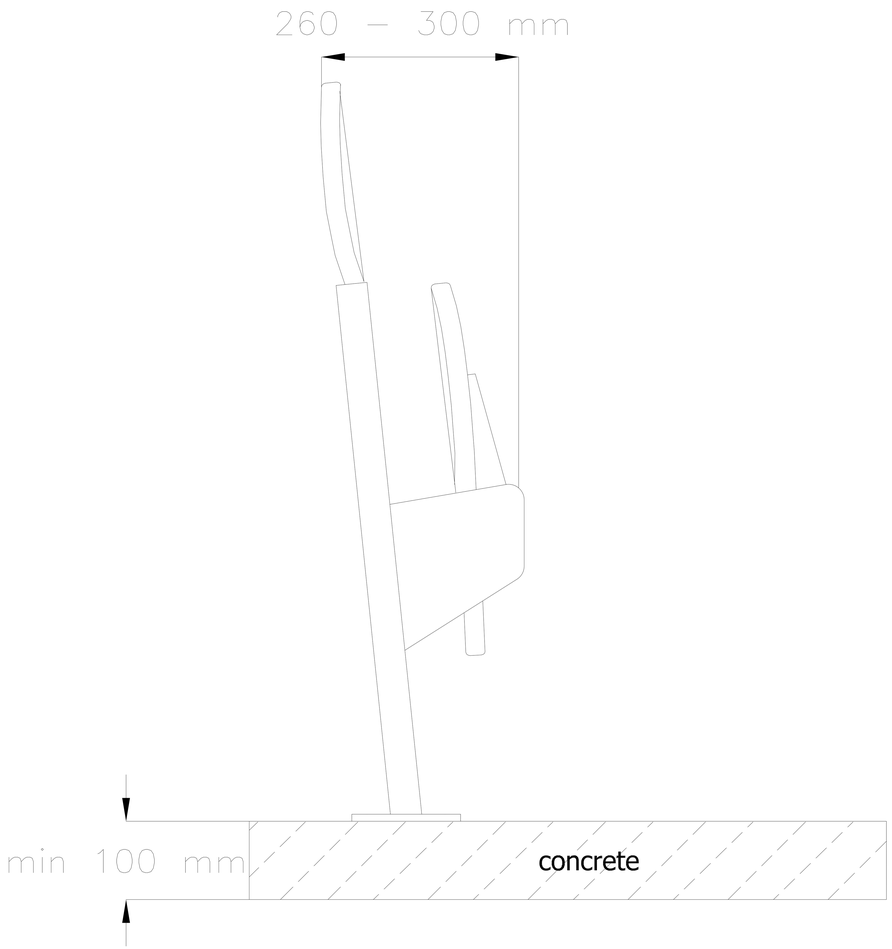

TOP VIEW

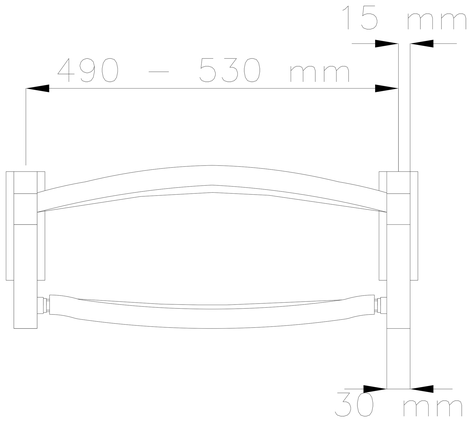

ERGO
PLYWOOD CHAIR :
- floor mounted structure
(indyvidual)

www.prostar-stadium-seating.com