FRONT VIEW

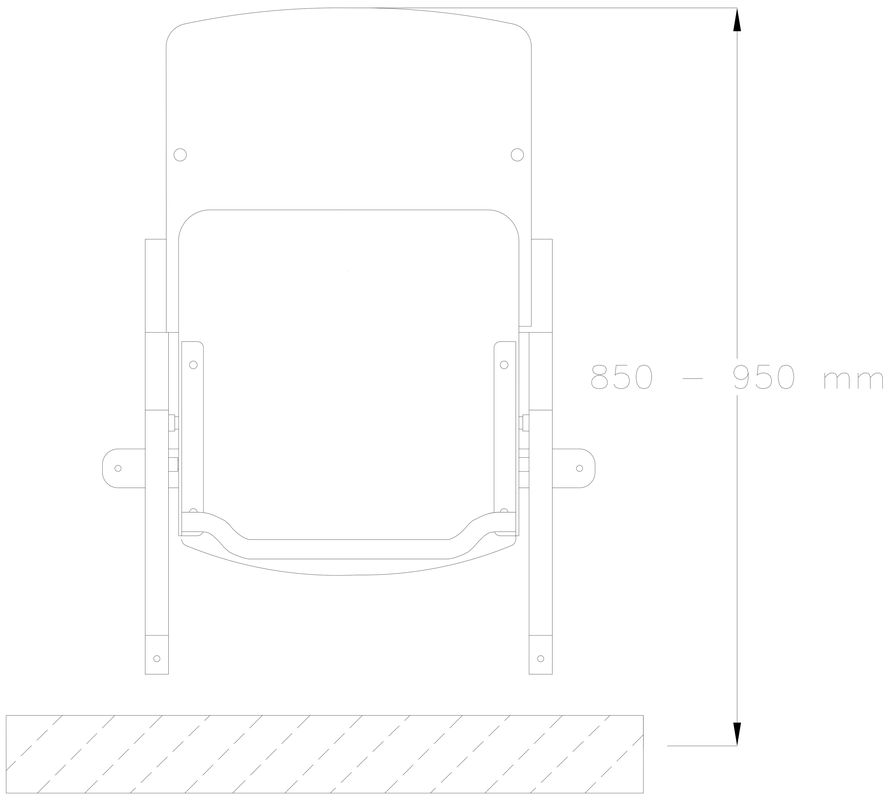

SIDE VIEW

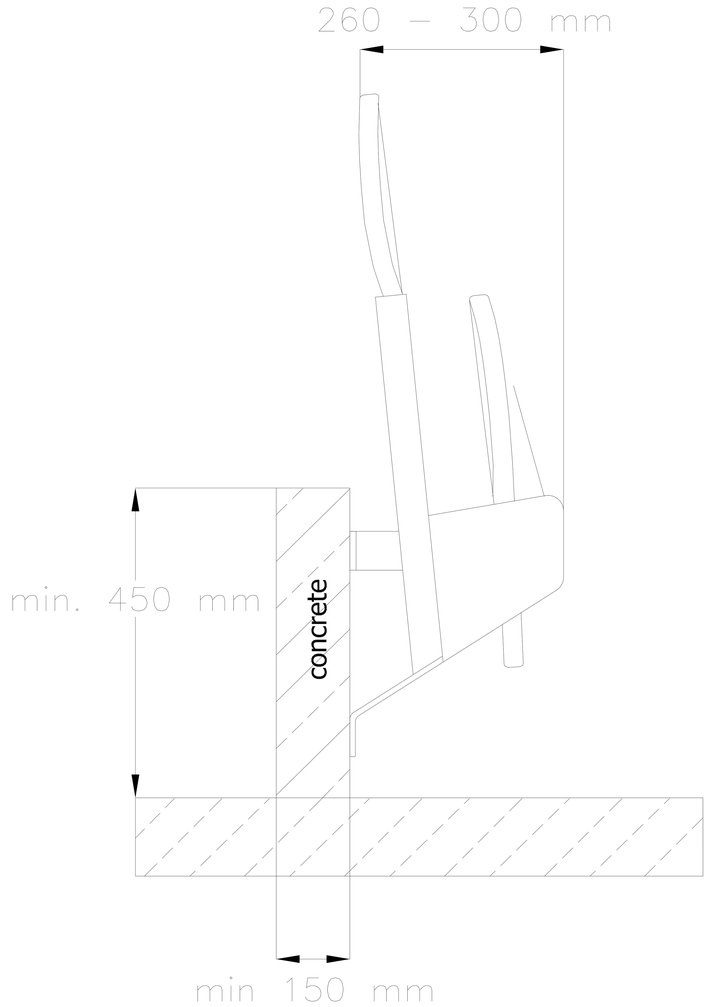

TOP VIEW

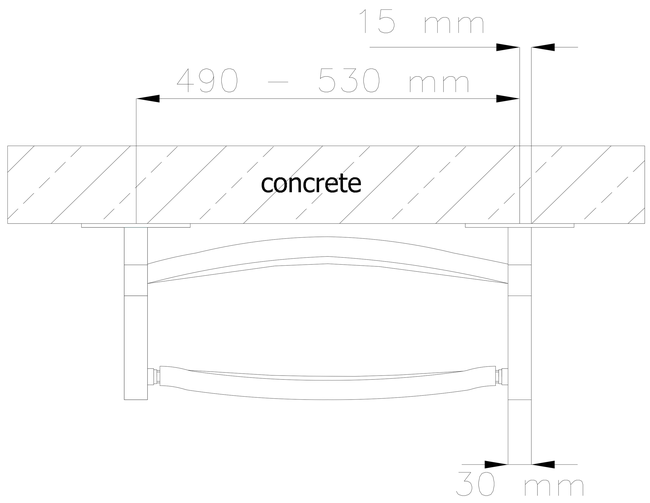

ERGO
PLAYWOOD CHAIR :
- riser mounted structure
(indyvidual)

www.prostar-stadium-seating.com